PRODUCT DATA SHEET

PIUSI ST200 DIESEL PUMP 240V AC 200LPM F00315000

F00315000

FLUID COMPATIBILITY

Diesel

240V AC vane pump delivering 200 L/min for high-throughput diesel transfer and bulk fuel dispensing. Cast iron body with Viton seals for long service life.

FEATURES

- Flow rate 200 L/min
- 240V AC power supply
- Cast iron pump body
- Viton seals for fuel compatibility
- Acetal internals
- Continuous duty design
- Weight 44.2 kg
- Diesel compatible

BENEFITS

- Faster tank fills, less downtime between jobs
- Viton seals for diesel service
- Cast iron construction for long service intervals
- Continuous duty suits high-volume fuel operations
- Field-serviceable design keeps you running

TECHNICAL SPECIFICATIONS

Flow Rate	200 L/min
Duty Cycle	continuous duty design
Voltage	240V AC
Weight	44.2 kg
Material	Cast Iron
Materials	cast iron body, Viton seals, acetal internals
Application	diesel fuel only
Seal Material	Viton for fuel compatibility

USE CASE & APPLICATION

- Fleet refuelling depots
- Workshop bulk diesel transfer
- Commercial fuel delivery trucks
- Mining and construction site fuel stations
- Agricultural bulk fuel dispensing

ST 200 AC

FEATURES

- *STURDY METALLIC FRAME*
- *READY TO USE*
- *EASY TO MOVE*
- *HEAVY DUTY*

The PIUSI ST 200 AC is a dispenser that allows high flow refueling thanks to the two integrated E120 self-priming rotary electric vane pumps. Fitted with by-pass valve and elevated reliability seal, the dispenser works even at low working temperatures and in every condition on worksites. The oval gear mechanical flow meter guarantees great precision (available on request). It is also available with wheels and handle (on request) for easier handling.

PERFORMANCE

UP TO 200 L/MIN	AC CONTINUOUS DUTY
FLOW RATE	POWER

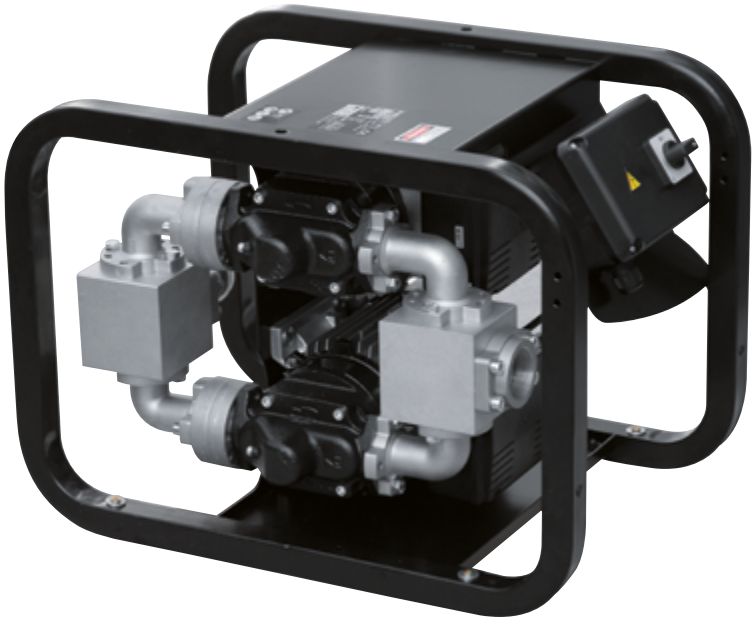

ST 200 AC

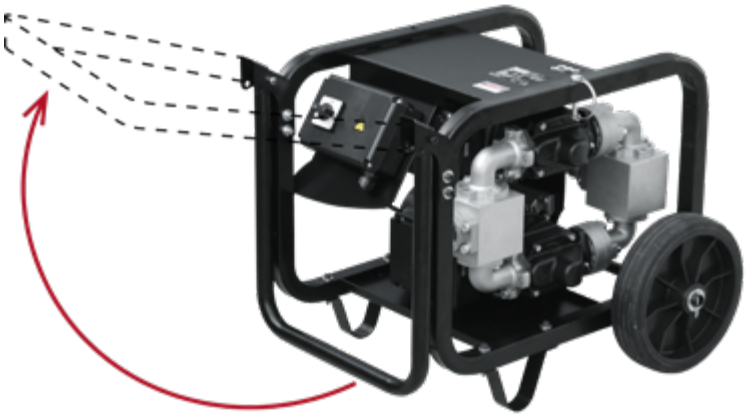

HANDY KIT: VERSION WITH WHEELS AND HANDLE

PACKAGING

CODE	WEIGHT		PACKAGING		
	KG	LBS	MM	INCH	PCS/BOX
F00315000	46	101	587X395X420	23,1X15,6X16,5	1
F16860000	-	-	-	-	-

ANY BIODIESEL · AIR · ANTIFREEZE · AdBlue® · BIODIESEL · **DIESEL** · FOOD · GASOLINE · GREASE · KEROSENE · OIL · WATER · WINDSCREEN

CHART

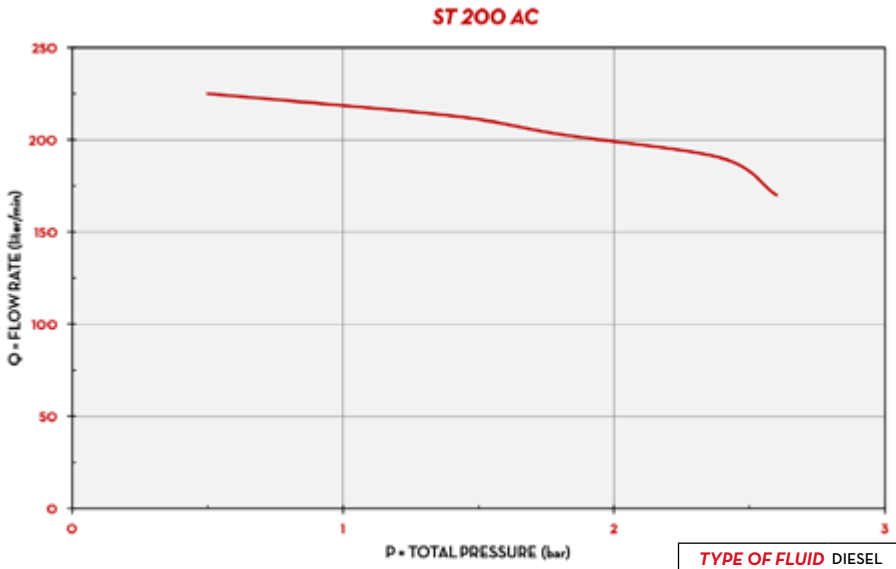

TYPE OF FLUID	DIESEL
TEMPERATURE	13°C

IN THE BOX

- ST 200 AC UNIT
- INSTRUCTION MANUAL

DETAILS

ON/OFF SWITCH

DIMENSIONS

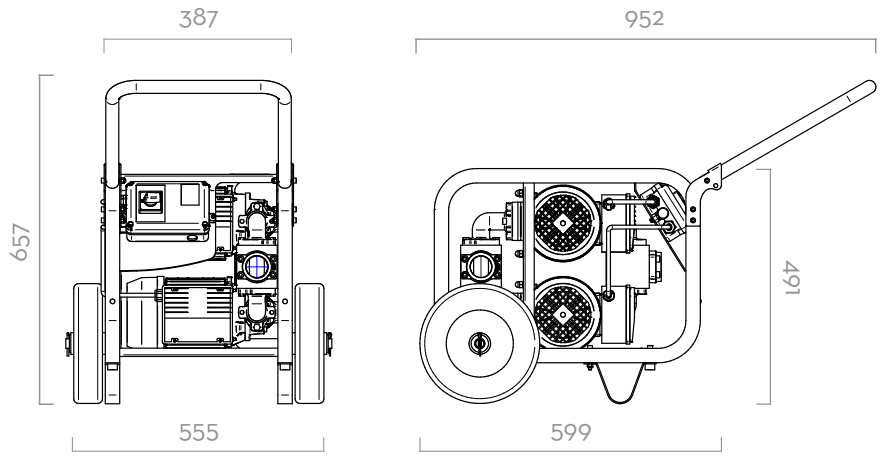

Dimensions expressed in millimeters

MATERIALS

- BODY: CAST IRON
- ROTOR: SINTERED STEEL
- VANES: ACETAL RESIN
- SEAL: VITON
- SHAFT: STEEL

TECHNICAL DATA

CODE	DESCRIPTION	FLUIDS TYPE	FLOW RATE		VOLTAGE			PUMP		MAX PRESSURE	OUTLET
			L/MIN	GPM	AC V./HZ DC VOLT	POWER WATT	AMP. MAX.	TYPE	N°	BAR	BSP
F00315000	ST 200 BASIC	D	200	52,7	230/50	2050	10	E 120	2	2,5	1" 1/2
F16860000	HANDY KIT (HANDLE + WHEELS)	D	-	-	-	-	-	-	-	-	-