PRODUCT DATA SHEET

PIUSI OCIO AUTOMATIC TANK GAUGE F0075510D

F0075510D

Premium electronic gauge for single diesel tanks. Displays litres in real-time with ±1% full-scale accuracy. Brass probe. Australian voltage. Tank-level visibility without dipping.

FEATURES

- ±1% full-scale accuracy
- Single tank electronic display
- Real-time litres readout
- Brass sensor construction
- 240V Australian voltage
- Diesel and oil compatible

BENEFITS

- Know stock levels without climbing tanks or dipping
- Plan refills before you run dry
- Australian voltage, no transformer needed
- Accurate enough for ordering decisions, not just guesswork

TECHNICAL SPECIFICATIONS

Accuracy	±1% full scale
Dimensions	165mm L x 60mm W x 180mm H
Balance Chamber Fitting	1/2" M BSP
Reading Type	0-100% / mm / inches / litres / gallons
Capillary Type	6 x 4 Rilsan (polyamide)
Max Working Temperature	-20ºc / +50ºc

USE CASE & APPLICATION

- Workshop diesel storage tanks
- Fleet refuelling stations
- Fixed oil storage at industrial sites
- Fuel depot inventory visibility

OCIO

FEATURES

- LOW/HIGH LEVEL ALARMS
- FLUID MEASURES INDICATION
- BUILT-IN DISPLAY

OCIO is PIUSI's tank level indicator suitable for any kind of fluid storaged in tanks up to a 4 mt depth. It gives a real time indication of the fluid quantity inside the tank. It is easy to calibrate and has two alarms that can be adjusted at a specific high and low level for high and low levels.

PERFORMANCE

UP TO **4MT** HEIGHT TANK	**± 1%** FULL SCALE ACCURACY
UP TO **50 MT** LENGTH PROBE TUBE	UP TO **30 CST** VISCOSITY

OCIO

10 METERS HOSE

BRASS PROBE

PACKAGING

CODE	WEIGHT		PACKAGING		
	KG	LBS	MM	INCH	PCS/BOX
FO075510D	2,2	4,8	300X410X100	11,8X16,1X3,9	1
FO075516O	2,2	4,8	300X410X100	11,8X16,1X3,9	1

ANY BIODIESEL | AIR | ANTIFREEZE | AdBlue® | BIODIESEL | DIESEL | FOOD | GASOLINE | GREASE | KEROSENE | OIL | WATER | WINDSCREEN

FUNCTIONING

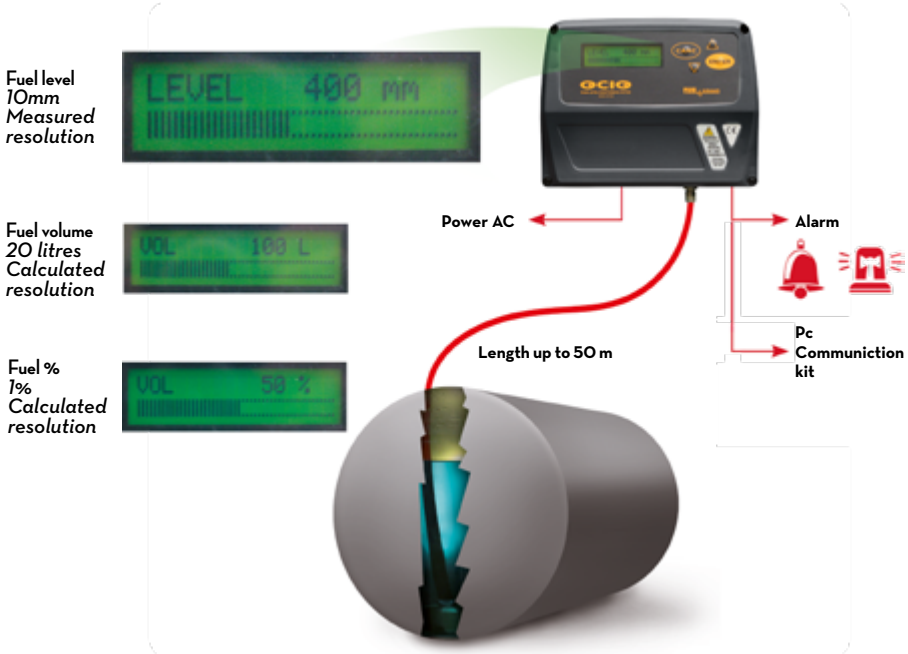

IN THE BOX

- OCIO UNIT
- PROBE
- 10 MT TUBE
- INSTRUCTION MANUAL

DETAILS

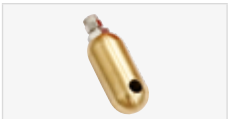

BRASS PROBE

2 ALARMS

DIMENSIONS

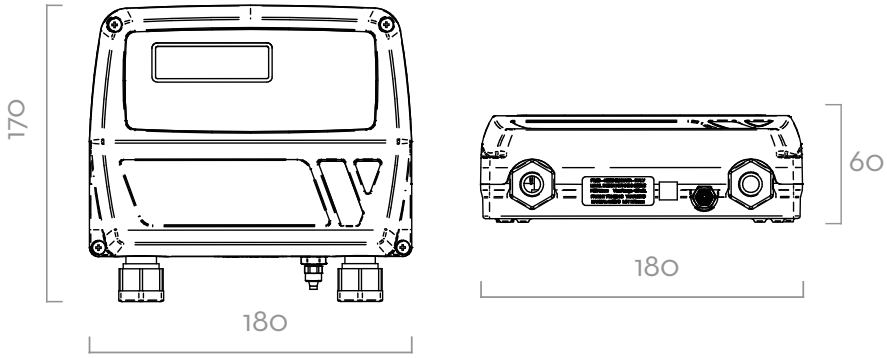

MATERIALS

- PROBE: BRASS
- TUBE: RILSAN (POLYAMIDE)

Dimensions expressed in millimeters

TECHNICAL DATA

CODE	DESCRIPTION	FLUIDS TYPE	VISCOSITY	VOLTAGE		RS EXIT
			cSt	AC V./HZ	POWER WATT	
FO075510D	LEVEL INDICATOR OCIO LV / RS OUTPUT	A B D O W	UP TO 30	230/50	20	AVAILABLE
FO075516O	LEVEL INDICATOR OCIO LV / 4/20 mA OUTPUT	A B D O W	UP TO 30	230/50	20	AVAILABLE