VISCO FLOWMAT

FEATURES

- ON DEMAND FLOW
- ELECTRONIC PRESSUR SWITCH
- BUILT-IN SECURITY VALVE
- HIGH PRESSURE

The PIUSI VISCO FLOWMAT is an electric gear pump suitable for transferring high viscosity oils. This self-priming pump is equipped with a pressure switch that features an automatic pump switch-off at the end of the delivery.

PERFORMANCE

UP TO 14 L/MIN FLOW RATE	12-25 BAR PRESSURE
BELOW 70 DB NOISE LEVEL*	UP TO 2000 CST VISCOSITY

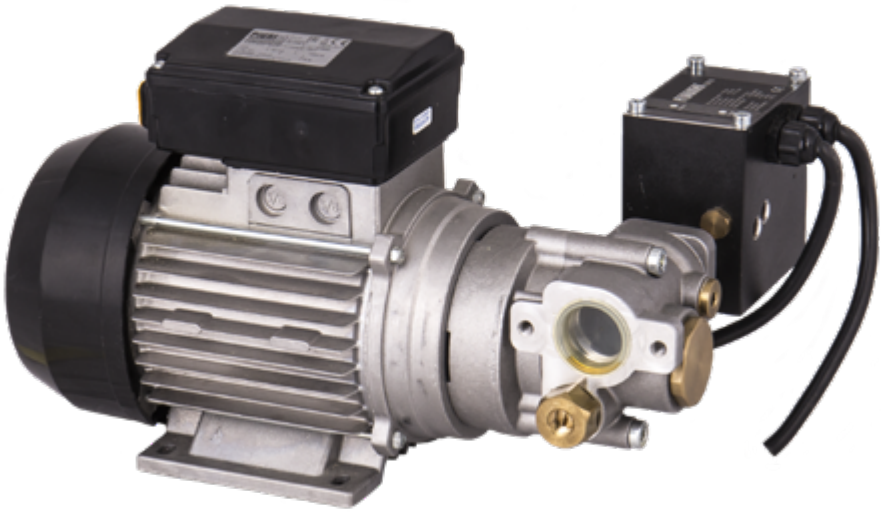

VISCOFLOWMAT

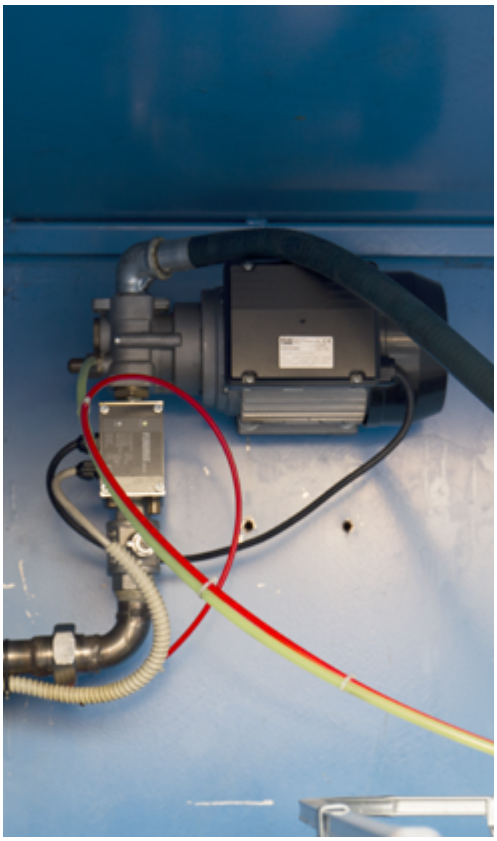

PACKAGING

CODE	WEIGHT		PACKAGING			
	KG	LBS	MM	INCH	PCS/PALLET	PCS/BOX
F0030200D	12	26,5	360X360X300	14,2X14,2X11,8		1
F0030204D	15	33,1	360X360X300	14,2X14,2X11,8		1
F0030206D	15	33,1	360X360X300	14,2X14,2X11,8		1

CHART

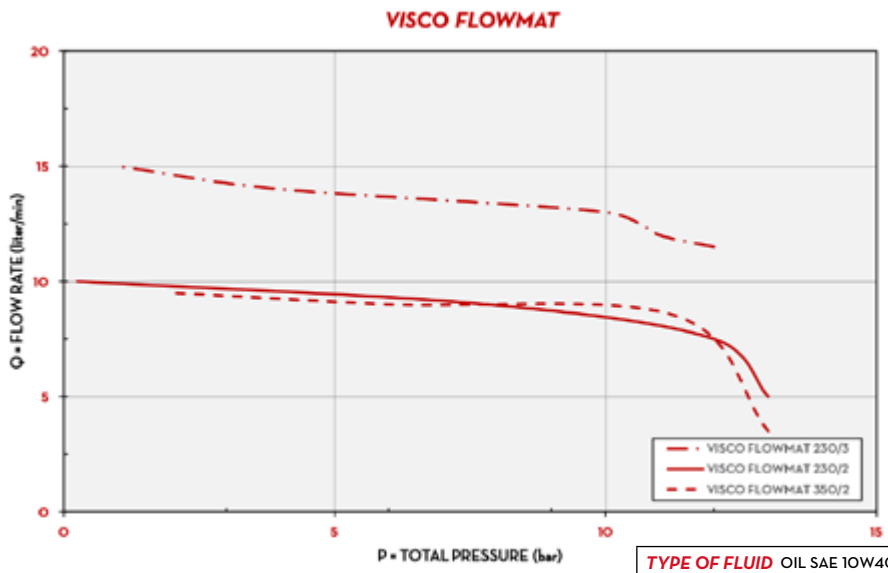

TYPE OF FLUID	OIL SAE 10W40
TEMPERATURE	20 °C

IN THE BOX

- VISCOMAT GEAR PUMP
- ANTI-SIPHON KIT
- KIT FLOWMAT
- INSTRUCTION MANUAL

DETAILS

ON/OFF SWITCH

ADJUSTABLE BYPASS

PRESSURE SWITCH

DIMENSIONS

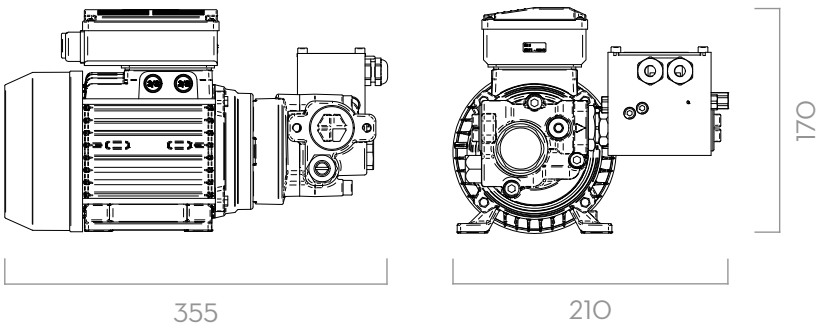

Dimensions expressed in millimeters

MATERIALS

- BODY: CAST IRON
- GEARS: SINTERED STEEL
- SHAFT: STEEL
- BYPASS: BRASS

TECHNICAL DATA

CODE	DESCRIPTION	FLUIDS TYPE	FLOW RATE		WORKING PRESSURE		VOLTAGE			RPM	INLET OUTLET BSP	BYPASS VALVE
			L/MIN	GPM	BAR	PSI	MOTOR V./ HZ	POWER WATT	AMP. MAX.			
F0030200D	VISCO FLOWMAT 200/2	O	9	2,4	12	170	230-50/60	800	3,8	1450	1" BSP	YES
F0030204D	VISCO FLOWMAT 230/3	O	14	3,7	16	227	230-50/60	1200	6	1450	1" BSP	YES
F0030206D	VISCO FLOWMAT 350/2	O	9	2,4	25	355	230-50/60	1250	6	1450	1" BSP	YES

*MEASURING MADE WITH PUMP ASSEMBLED OVER DRUM TAKEN FROM 1 METER DISTANCE WITHOUT ANY ENVIROMENTAL NOISES.